For Global Market

# Maysun Solar

## Polycrystalline PV Module

## MS(250-280)P-60 Series

- ▶ High PID resist performance
- ▶ Steady power output
- ▶ Reducing cell series resistance
- ▶ More power output

System voltage 1000V/1500V standard

| 250 | 260 | 265 | 270 | 275 | 280 |
|---|---|---|---|---|---|

EN

## ELECTRICAL SPECIFICATIONS

| | | | | | | |
|---|---|---|---|---|---|---|
| STC rated output ($P_{mpp}$)* | 250 Wp | 260 Wp | 265 Wp | 270 Wp | 275 Wp | 280 Wp |
| PV Module size | 1640*992*35 MM | | | | | |
| Standard sorted output | 0/+5 Wp | | | | | |
| Warranted power output STC ($P_{nominal}$) | 250Wp | 260 Wp | 265 Wp | 270 Wp | 275 Wp | 280 Wp |
| Rated voltage ($V_{mpp}$) at STC | 30.48 V | 30.88 V | 30.92 V | 31.08 V | 31.12 V | 31.16 V |
| Rated current ($I_{mpp}$) at STC | 8.21 A | 8.43 A | 8.58 A | 8.70 A | 8.85 A | 8.99 A |
| Open circuit voltage ($V_{oc}$) at STC | 37.47 V | 37.72 V | 37.87 V | 38.00 V | 38.45 V | 38.85 V |
| Short circuit current ($I_{sc}$) at STC | 8.81A | 8.95A | 9.18 A | 9.45 A | 9.52 A | 9.67 A |
| Module efficiency | 15.4% | 16.0% | 16.3% | 16.6% | 16.9% | 17.2% |
| Rated output ($P_{mpp}$) at NOCT | 187.5 Wp | 195.0 Wp | 198.8 Wp | 202.5 Wp | 206.3 Wp | 210.1 Wp |
| Rated voltage ($V_{mpp}$) at NOCT | 27.73 V | 27.94 V | 27.98 V | 28.12 V | 28.15 V | 28.17 V |
| Rated current ($I_{mpp}$) at NOCT | 6.90 A | 6.98 A | 7.10 A | 7.20 A | 7.33 A | 7.46 A |
| Open circuit voltage ($V_{oc}$) at NOCT | 34.24 V | 34.46 V | 34.60 V | 34.71 V | 35.13 V | 35.16 V |
| Short circuit current ($I_{sc}$) at NOCT | 7.45 A | 7.54 A | 7.73 A | 7.96 A | 8.02 A | 8.09 A |

| | |
|---|---|
| Temperature coefficient ($P_{mpp}$) | - 0.407%/K |
| Temperature coefficient ($I_{sc}$) | +0.049%/K |
| Temperature coefficient ($I_{mpp}$) | - 0.000%/K |
| Temperature coefficient ($V_{mpp}$) | - 0.408%/K |
| Temperature coefficient ($V_{oc}$) | - 0.310%/K |
| Normal operating cell temperature (NOCT) | 43±2°C |

| | |
|---|---|
| Maximum system voltage (IEC) | 1000$V_{DC}$ / 1500$V_{DC}$ |
| Number of diodes | 3 |
| Maximum series fuse rating | 15 A |
| Operating Temperature | -40℃ to +85℃ |

* Measurement tolerance +/- 3%

IEC 61701 Salt Spray test Severity (3)

IEC 60068-2-68 Sand test

IEC 62804 1500V PID test

MAYSUN SOLAR

## RELATED PARAMETERS

| | |
|---|---|
| Cell type | Polycrystalline |
| Number of cells / cell arrangement | 60 / 6 x10 |
| Cells dimension | 6″ |
| Packing unit | 30 modules |
| Weight of packing unit (for container) | 557 kg / 1228 lbs |

## MECHANICAL SPECIFICATIONS

| | |
|---|---|
| Outer dimensions (L x W x H) | 1640 x 992 x 35 mm<br>64.57 x 39.06 x 1.38 in |
| Frame technology | Aluminum, silver anodized |
| Module composition | Glass / EVA / Backsheet (white) |
| Weight (module only) | 18 kg / 39.68 lbs |
| Front glass thickness | 3.2 mm / 0.13 in |
| Junction box IP rating | IP 65/67 |
| ①Cable length(IEC) | 600/900 mm / 23.62/35.43 in |
| Cable diameter (IEC) | 12 AWG /4 $mm^2$ |
| ②Maximum load capacity | 5400 Pa |
| Fire performance (IEC) | Class C |
| Connector type (IEC) | MC4 compatible |

Refer to Maysun Solar crystalline installation manual.

## QUALIFICATION AND LINEAR WARRANTIES

| | |
|---|---|
| Product standard | IEC61215, 61730 |
| Extended product warranty | 12 years |
| Output decline 3%/year performance $P_{mpp}$ (STC) | 1st year |
| Output decline 0.7%/year performance $P_{mpp}$ (STC) | 2nd~ 25th years |

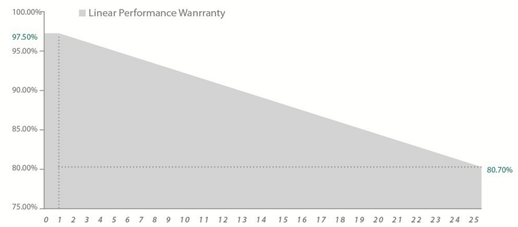


I-V Curves of PV module MS260P-60 at various solar irradiance

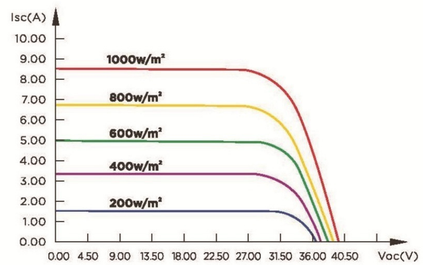


## MODULE DIMENSION DETAILS

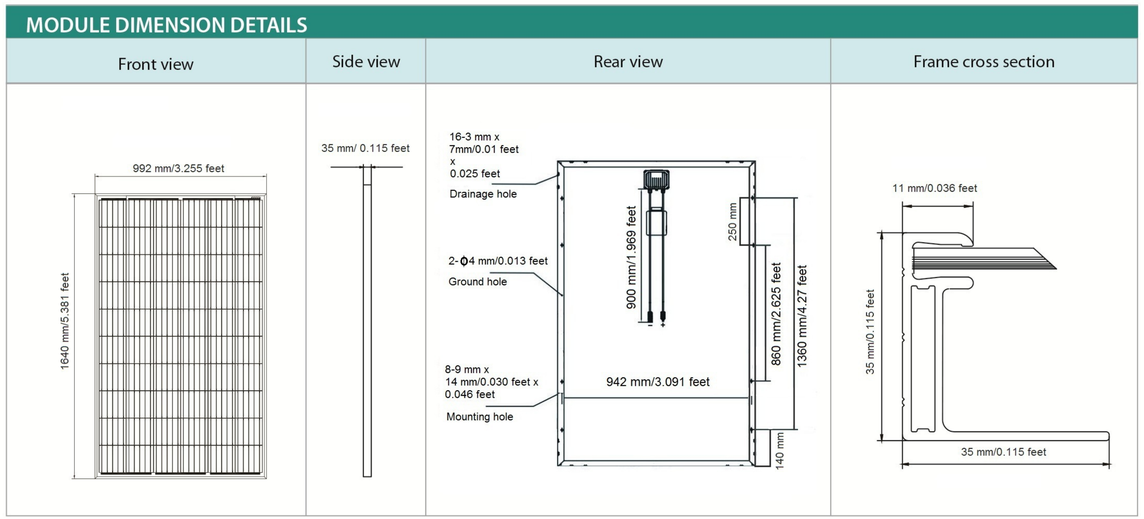


Maysun Solar FZCO Reserves the right of final interpretation.
Specifica tions and designs included in this datasheet are subject to change without notice.


Maysun Solar FZCO
Address: No.FZS2AB01, Jebel Ali, Dubai, UAE
Website: www.maysunsolar.com